US



MIBRASA®

PARRILLA

User manual

Read all instructions before installing and using the Mibrasa® Parrilla. Save these instructions.

A MAJOR CAUSE OF PARRILLA-RELATED FIRES IS FAILURE TO MAINTAIN REQUIRED CLEARANCES (AIR SPACES) TO COMBUSTIBLE MATERIALS. IT IS OF UTMOST IMPORTANCE THAT THIS PARRILLA BE INSTALLED



The Craftsmen of Fire!

We invite you to experience Mibrasa® grill cooking for yourselves. Cook and create in a way that awakens your taste buds and reminds us of the beauty in simplicity.

QUALITY GUARANTEE

CE EUROPEAN STANDARD LINE-EN 12815/2002 · GOST-R · c UL us LISTED MH6371 · CLASSIFIED UL EPH · FCSI FOODSERVICE CONSULTANTS SOCIETY INTERNATIONAL · MAFSI Manufacturer's Agents for the Food Service Industry

PLEASE READ THIS ENTIRE MANUAL YOU INSTALL THE OVEN. FAILURE TO FOLLOW INSTRUCTIONS MAY RESULT IN PROPERTY DAMAGE, BODILY INJURY, OR EVEN DEATH.
SAVE THESE INSTRUCTIONS

Index

Pg.

1. Introduction and Mibrasa® Parrilla features 1

2. Mibrasa® Parrilla models and dimensions
   - 2.1 SLIM 3
   - 2.2 CLASSIC Single 3
   - 2.3 CLASSIC Double 4
   - 2.4 CLASSIC Triple 4
   - 2.5 FIRE 5

3. Parts of the Mibrasa® Parrilla
   - 3.1 Parts of the Mibrasa® Parrilla 7
   - 3.1 Included accessories 8
   - 3.2 Optional accessories 8

4. Installation instructions
   - 4.1. Safety requirements for Parrilla surroundings 10
   - 4.2 Ventilation and exhaust recommendations 10
   - 4.3 Installation and assembly instructions 11

5. Operation 13
   - 5.1 Lighting up 13
   - 5.2 During service

6. Maintenance and safety standards 15
   - 6.1. Daily cleaning 15
   - 6.2. Maintenance 15
   - 6.3. Special care 16
   - 6.4. Safety standards 16
   - 6.5 DANGERS

7. General conditions 18
   - 7.1. Warranty 18
   - 7.2. Returns 18
   - 7.3. Property Reserve

1 INTRODUCTION AND PARRILLA FEATURES

MIBRASA PARRILA

Designed and built using cutting-edge engineering while respecting the purest and simplest ancestral culinary techniques.

Built using quality steels providing strength and durability; ergonomically designed for practicality and ease of use, each feature plays a crucial part in delivering the ultimate grilling machine for every chef.



COOK WITH MAXIMUM VERSATILITY AND FUNCTIONALITY

ABSOLUTE CONTROL FOR OPTIMAL COOKING
The elevating system allows you to control the grill over the coals to vary your cooking techniques and obtain the optimal result.

EXTENSIVE COOKING SURFACE
Cook multiple products simultaneously with up to 3 cooking grills on one machine.

ZERO MAINTENANCE
Remove the grills with ease for general cleaning and maintenance. In the same burning pit, scoop out the ashes at the end of every service.

MULTI-COOKING SURFACES HOLD AND REST INGREDIENTS
with the heating rack by making use of the residual heat off the coals.

HANG INGREDIENTS FOR UNIQUE FLAVORS
Position the vertical cooking rack over and swivel hooks over the coals or in front of the GMB Fire basket.

SUSPENDED COOKING
with the movable cooking rack module for extra cooking surface.

BUILT-IN COOLING SYSTEM IN THE BODY MAXIMUM SAFETY FOR THE CHEF
Residual heat transmitted from the hearth to the exterior is cooled down via the ventilation circuit built into the walls.

HEAT INSULATION AROUND THE BURNING PIT
The design and build quality ensures heat is retained within the walls and the burning area.

REFRACTORY BASE
Combine charcoal and firewood for a high performing grill, and enhance your cooking experience.

MAXIMUM HEAT EFFICIENCY
The hearth lined with refractory bricks is designed to harness heat energy to the max.

2 MODELS & DIMENSIONS

2. Models and dimensions

2.1.1 SLIM Single



2.1.2 SLIM Double



Size	Reference	Dimensions	Grill dimensions	No. grills	Charcoal load
75	GMB 75	29.5 x 27.56 37.88 in. 750 x 700 x 1043 mm	19. 6 x 18.1 in. 500 x 460 mm	1	17.6 lbs 8 kg
100	GMB 100-2GR	44.37 x 27.56 x 37.88 in. 1127 x 700 x 1043 mm	17.1 x 18.1 in. 435 x 460 mm	2	22 lbs 10 kg

2.2 CLASSIC Single

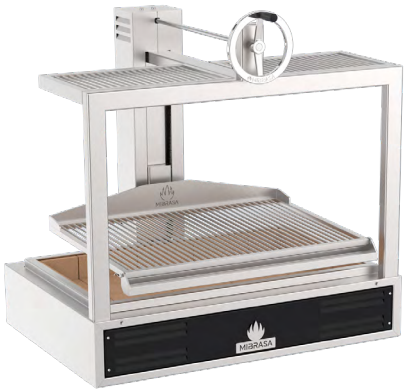

Size	Reference	Dimensions	Grill dimensions	No. grills	Charcoal load
100	GMB 100	44.4 x 34 x 45 in. 1127 x 863 x 1143 mm	35 x 24.8 in. 890 x 630 mm	1	22 lbs 10 kg

2. Models and dimensions

2.3 CLASSIC Double

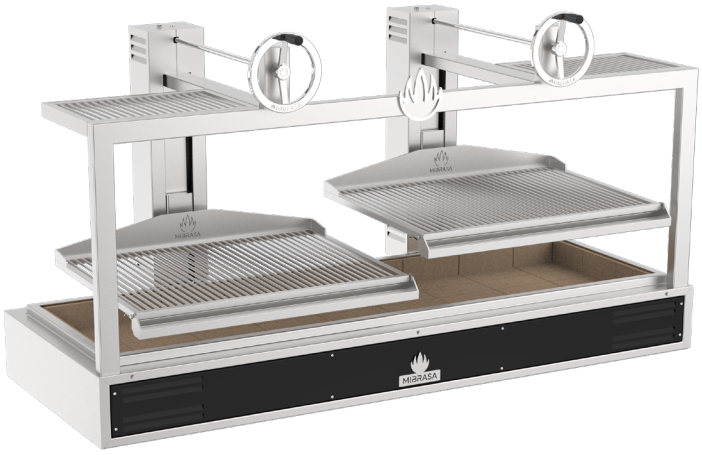

Size	Reference	Dimensions	Grill dimensions	No. grills	Charcoal load
130	GMB 130	49.8 x 34 x 45 in. 1265 x 863 x 1143 mm	19.7 x 24. in. 500 x 630 mm	2	26.5 lbs 12 kg
160	GMB 160	64.4 x 34 x 45 in. 1637 x 863 x 1143 mm	27 x 24.8 in. 685 x 630 mm	2	33 lbs 15 kg
200	GMB 200	81.8 x 34 x 45 in. 2077 x 863 x 1143 mm	35 x 24.8 in. 890 x 630 mm	2	44 lbs 20 kg

2.4 CLASSIC Triple



Size	Reference	Dimensions	Grill dimensions	No. grills	Charcoal load
200	GMB 200-3GR	81.8 x 34 x 45 in. 2077 x 863 x 1143 mm	19.7 x 24.8 + 27 x 24.8 in. 500 x 630 mm + 685 x 630 mm	3	44 lbs 20 kg
152	GMB 252-3GR	99.2 x 34 x 45 in. 2520 x 863 x 1143 mm	27 x 24.8 in. 685 x 630 mm	3	55 lbs 25 kg

2. Models and dimensions

2.5 FIRE

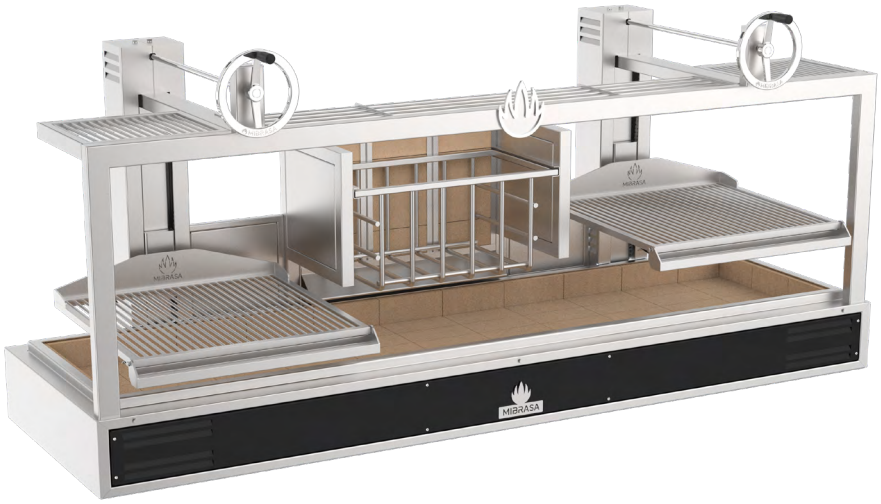

Size	Reference	Dimensions	Grill dimensions	No. grills	Charcoal load
160	GMB 160-FIRE	64.4 x 34 x 45 inches 1637 x 863 x 1143 mm	19.7 x 24.8 inches 500 x 630 mm	2	26.5 lb 12 kg
200	GMB 200-FIRE	81.8 x 34 x 45 inches 2077 x 863 x 1143 mm	27 x 24.8 inches 685 x 630 mm	2	33 lb 15 kg
252	GMB 252-FIRE	99.2 x 34 x 45 inches 2520 x 863 x 1143 mm	27 x 24.8 inches 685 x 630 mm	2	33 lb 15 kg

3 PARTS OF THE PARRILLA

3. Parts of the Parrilla

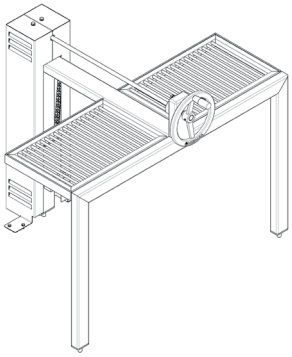

Frame structure (CLASSIC and FIRE Models)

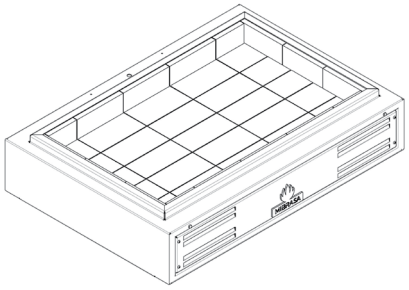

Burning pit base



Elevating wheel

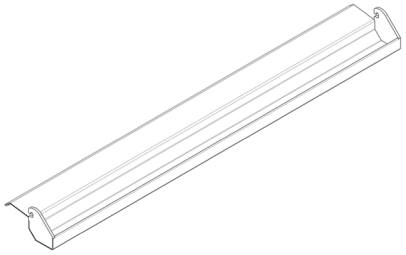

Grease collector

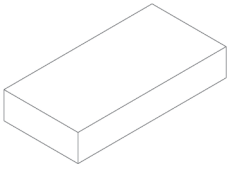

Refractory bricks

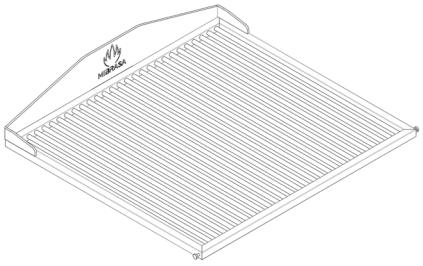

Rod cooking grill

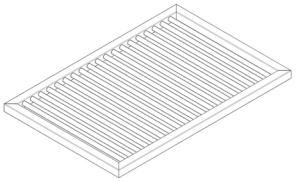

Heating grill racks

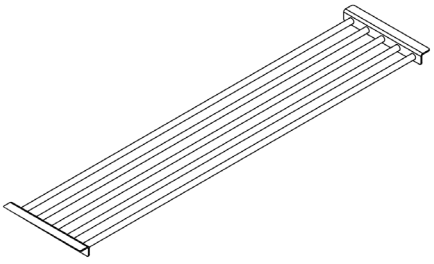

Vertical cooking rack
(FIRE models)

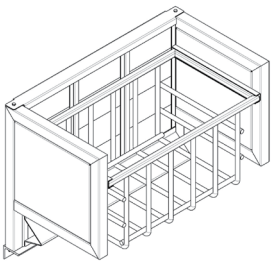

Fire Basket
(Model FIRE)

3.1 Included accessories

Model	Included accessories
SLIM	Cooking grill/s, Mibrasa tongs, ember poker, ash shovel and metal grill brush.
CLASSIC	
FIRE	Cooking grills, vertical cooking rack, 2 swivel hooks, Mibrasa tongs, ember poker, ash shovel, metal grill brush

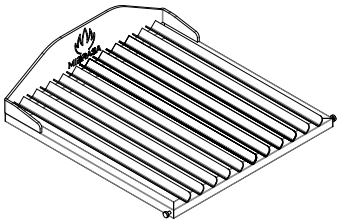

Rod cooking grill/s

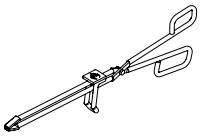

Mibrasa tongs

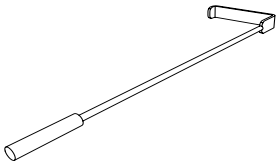

Ember poker

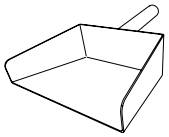

Ash shovel

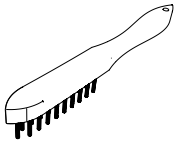

Metal grill brush

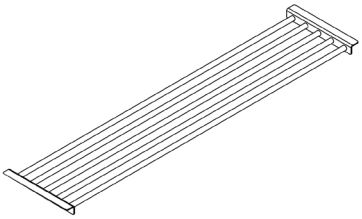

Vertical cooking rack
(FIRE models)



Swivel hooks
(FIRE models)

3.2 Optional accessories

Model	Optional recommended accessories
SLIM	Stand, protective structure, end of service lid, vertical cooking rack, swivel hooks
CLASSIC	
FIRE	Stand, protective structure, end of service lid

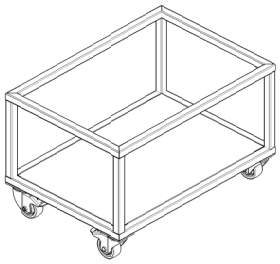

Complete stand/skeleton stand

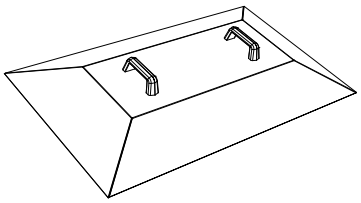

End of service lid

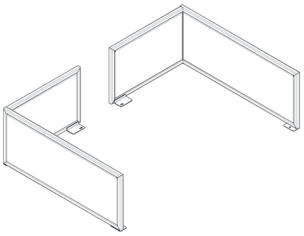

Protective structure

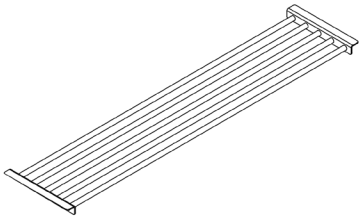

Vertical cooking rack

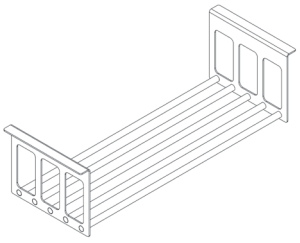

Extra cooking module



Swivel hooks

4
INSTALLATION INSTRUCTIONS

4. Installation instructions

4.1 Safety requirements for Mibrasa® Parrilla grill surroundings

The installer should contact the local building or fire officials concerning any installation restrictions or need for inspection of the Parrilla installation.

- Clearances to construction:
  Unit to backwalls: 7 in. / 180 mm
  Unit to sidewalls: 28 in. / 720 mm

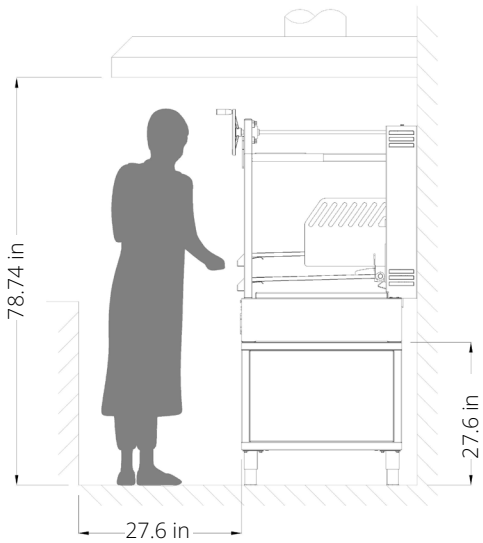

- Workspace for the chef and recommended height of the worktop:

4.2 Ventilation and exhaust recomendations

Reference	Flow rate	Hood dimensions (width x depth)	Minimum height of hood from floor
GMB 75	2060,02 CFM 3500 m³/h	51.18 x 51.18 in. 1300 x 1300 mm	78.74 inches 2000 mm
GMB100-2GR GMB 100	2406.26 CFM 4100 m³/h	59.05 x 51.18 in. 1500 x 1300 mm	
GMB 130	2526.57 CFM 4300 m³/h	70.86 x 51.18 in. 1800 x 1300 mm	
GMB 160 GMB 160-FIRE	2703.03 CFM 4600 m³/h	78.74 x 51.18 in. 2000 x 1300 mm	
GMB 200 GMB 200-3GR GMB 200-FIRE	2999.8 CFM 5100 m³/h	98.43 x 51.18 in. 2500 x 1300 mm	
GMB 252-3GR GMB 252-FIRE	3288.55 CFM 5600 m³/h	98.43 x 51.18 in. 3000 x 1300 mm	

Installation of the exhaust hood with the Standard for Ventilation Control and Fire Protection of Commercial cooking operations, NFPA 96.

*Clean the surfaces before applying the silicone. Use any “NFS approved” silicone. Apply and distribute the silicone along the perimeter of the appliance in order to have a smooth contact surface without burrs or missing material. Remove excess silicone with a damp cloth. Once sealed, in accordance with this procedure, the result is intended to prevent liquid spillage on adjacent surfaces of countertop from passing under inaccessible portions of the equipment.

4.3 Installation and assembly instructions

Video

1 Remove the grease collector and the grills.

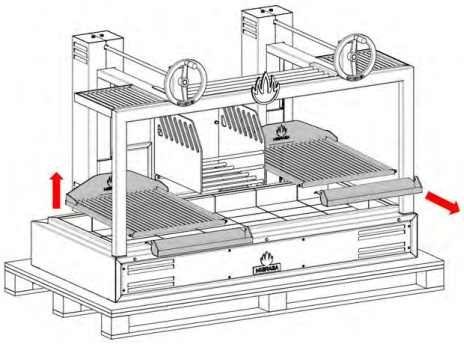

2 Remove the heating rack grids and the vertical cooking rack (Fire models).

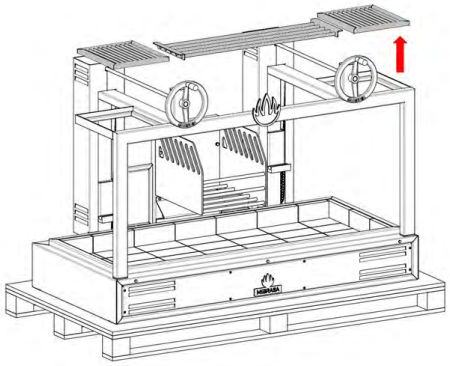

3 Place the main body on top of the stand/worktop.

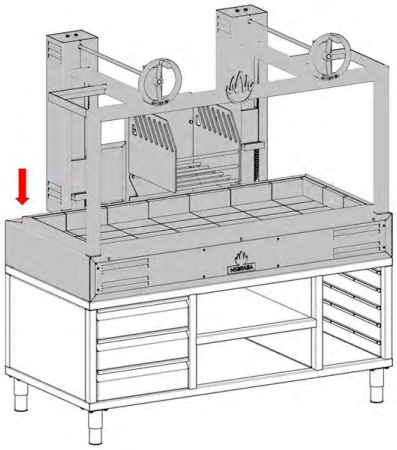

4 Replace the vertical cooking rack and the heating rack grids.

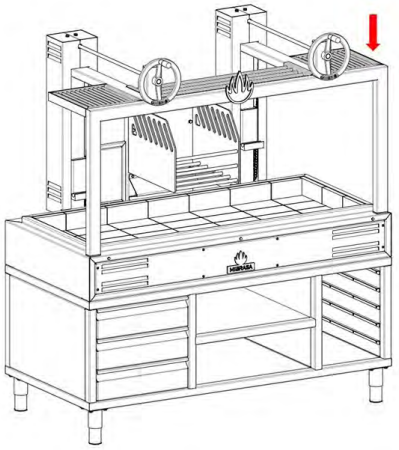

5 Replace the grills and the grease collectors.

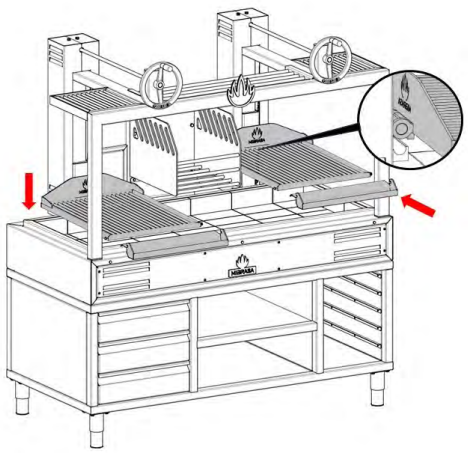

6 Ready to work.

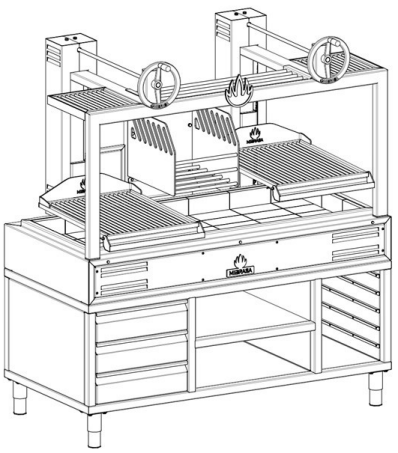

5
OPERATION

5. Operation

5.1 Lighting up

1 Remove the grease collector and the grill.

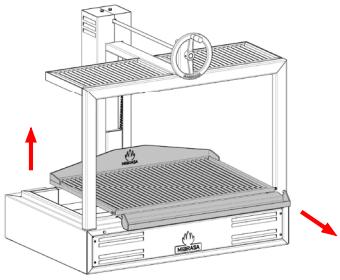

2 Load the charcoal.

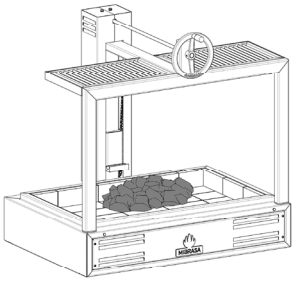

3 Place and light the Ecofire firelighters .

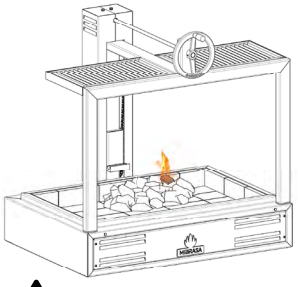

Always light the charcoal inside the refractory base.

4 Spread the embers.

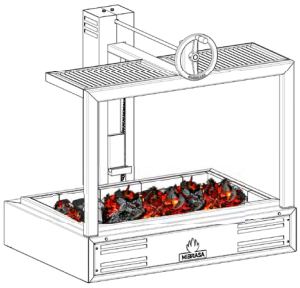

5 Replace the grill and the grease collector.

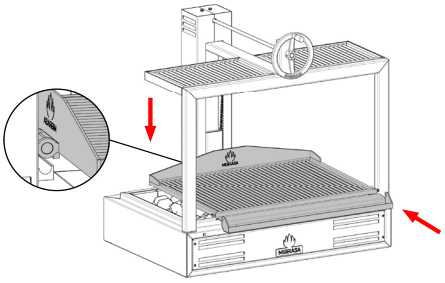

6 Ready to cook.

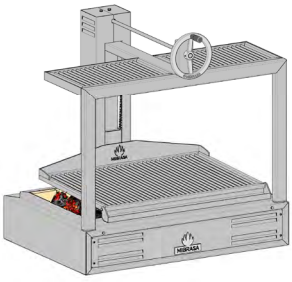

5.2 Parrilla operation

Grease collector:

Remove

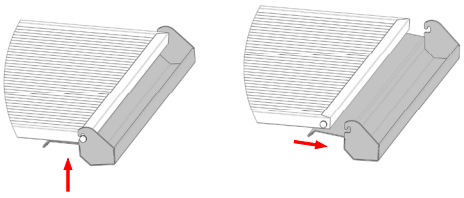

Return

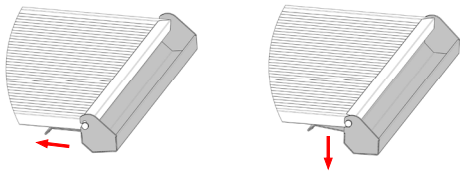

Adjusting grill height:

To raise

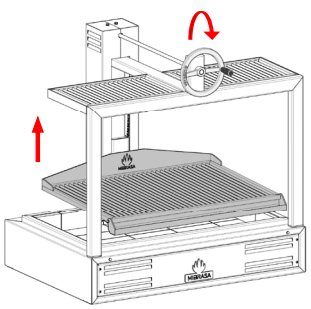

To lower

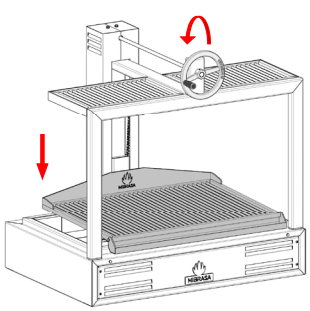

6 MAINTENANCE AND SAFETY STANDARDS

6. Maintenance and safety standards

6.1 Daily cleaning

Do not use chemical products or water to clean the inside of the Mibrasa® Parrilla.

Elevation system: once cold, clean the entire surface of the guide column and the drive shaft with degreaser.

Grills: clean using the grill brush before and after each use.

Ash extraction: use the ash shovel to remove the ash. Once the ashes have completely cooled down they can be used as fertilizer.

WARNING Do not dispose the ashes in a flammable-container or heat-deformable container.

6.2 Maintenance

Once a year, remove the elevating system casing and grease the chain with special high temperature grease (minimum temperature use 300°C).

6.3 Special care

Exhaust hood and ductwork: it is important to keep the exhaust hood filters clean as well as the interior and ducts, to avoid a build up of soot and fat, which could result in a possible fire.

Follow the weekly cleaning procedures and annual maintenance of the hood, ventilation box and flue ducts in accordance to the exhaust hood manufacturer's requirements. Pulverisation (water mist) water filtration systems are also accepted to compliment the use of this Parrilla. The ductwork should be inspected at least twice a year to determine when creosote build up has occured.

Mibrasa® is not responsible for any damages occurred caused by wrongful use, when the installation instructions have not been followed or wrongful maintenance of the exhaust hood.

1 Creosote – Formation and need for removal. When wood is burned slowly, it produces tar and other organic vapors that combine with expelled moisture to form creosote. The creosote vapors condense in a relatively cool oven flue and exhaust hood of a slow burning fire. As a result, creosote residue accumulates on the flue lining and exhaust hood. When ignited, this creosote makes an extremely hot fire. The oven flue should be inspected at least twice a year to determine when creosote buildup has occurred. When creosote has accumulated, it should be removed to reduce risk of fire.

6.4 Safety standards

- Only use charcoal or firewood with the Mibrasa® Parrilla.
- The first time the Mibrasa® Parrilla is used do not cook food for at least one hour after lighting.
- Proceed with reasonable care when operating a Mibrasa® Parrilla. Never leave the Mibrasa® Parrilla unattended when lit.
- Wear heatproof gloves while using the Mibrasa® Parrilla.

CAUTION

Do not overload/fire - when flames spill out of the Mibrasa® Parrilla grill, you are overfiring.

- Disposal of ashes – Ashes should be placed in a metal container with a tight-fitting lid. The closed container of ashes should be placed on a non-combustible floor or on the ground, well away from all combustible materials, pending final disposal. When the ashes are disposed they should be retained in the closed container until all cinders have thoroughly cooled.
- Do not attempt to pour water over the hot coals.
- Do not clean the Mibrasa® Parrilla when it is in operation or hot.
- Do not use chemical products to clean the exterior of the Mibrasa® Parrilla when in use or still hot.
- Do not use products that have not been specified for use with the Mibrasa® Parrilla.

6.5 DANGERS

- If the Parrilla is not properly installed, a fire may result. To reduce the risk of fire, follow the installation instructions.
- Keep children and pets away from the Mibrasa® Parrilla and flammable products. Accessible parts of the Mibrasa® Parrilla may be very hot.
- Do not use alcohol, oil or other liquids similar to ignite or rekindle hot coals. Use only Mibrasa® Ecofire lighters.
- In the case of installing the Mibrasa® Parrilla in an outdoor setting, do not cover it with any type of protective cover or inflammable material when it is in operation or hot.
- Read point 4.1 for restrictions on minimum distances from combustible materials.

7 GENERAL CONDITIONS

7. General conditions

7.1 Warranty

All Mibrasa® Parrillas have a 2-year warranty against any manufacturing defect. The user will be responsible for the installation, fine tuning and maintenance of the goods.

The warranty is void of:

(I) damage caused by misuse or poor product installation,

(II) where the buyer or third party has started repairs, modifications or adjustments without the prior consent of Mibrasa®,

(III) those defects not immediately notified within the warranty period stated above,

(IV) those defects or damage due to negligence not attributable to Mibrasa®, or an accident, misuse, improper installation, mishandling or abnormal conditions of temperature, humidity or dirt,

(VI) that have become damaged through no fault of Mibrasa®.

7.2 Returns

- All goods must be returned in the original condition.
- All returns must be notified in writing, and must be confirmed by our sales department. All returns must reach Mibrasa® prepaid. Returned material must enclose the invoice and delivery note number.
- Returns of goods will only be accepted in its original packaging, unused and in re-sellable condition. Returned goods that are used, obsolete or worn out will not be considered under warranty and a credit note will not be issued.
- For all returned goods, there will be a 10% fee of the refund amount to cover depreciation, demerit and administrative tasks.

7.3 Property reserve

Mibrasa® retains title to the goods to the total amount of the price integrity. Mibrasa® reserves the right to change their products and prices without notice.

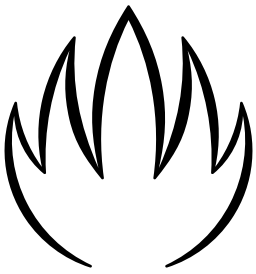

MIBRASA®

Mibrasa® USA Corporation
8950 SW 74th Ct, Suite 1406
Miami, Florida 33156
USA.

408-348-7607
usa@mibrasa.com
www.usa.mibrasa.com

Version 11.26